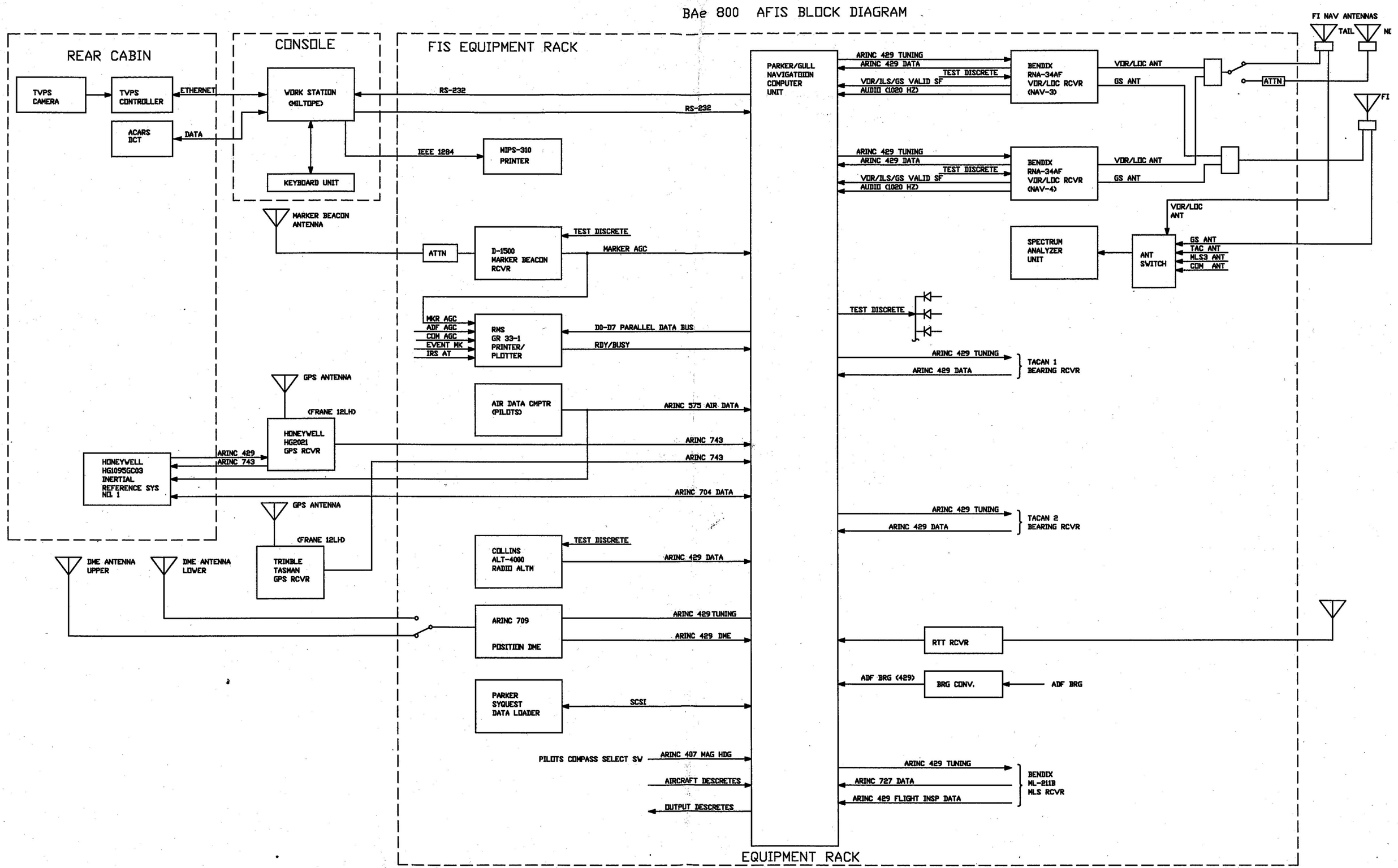BAe 800 AFIS BLOCK DIAGRAM